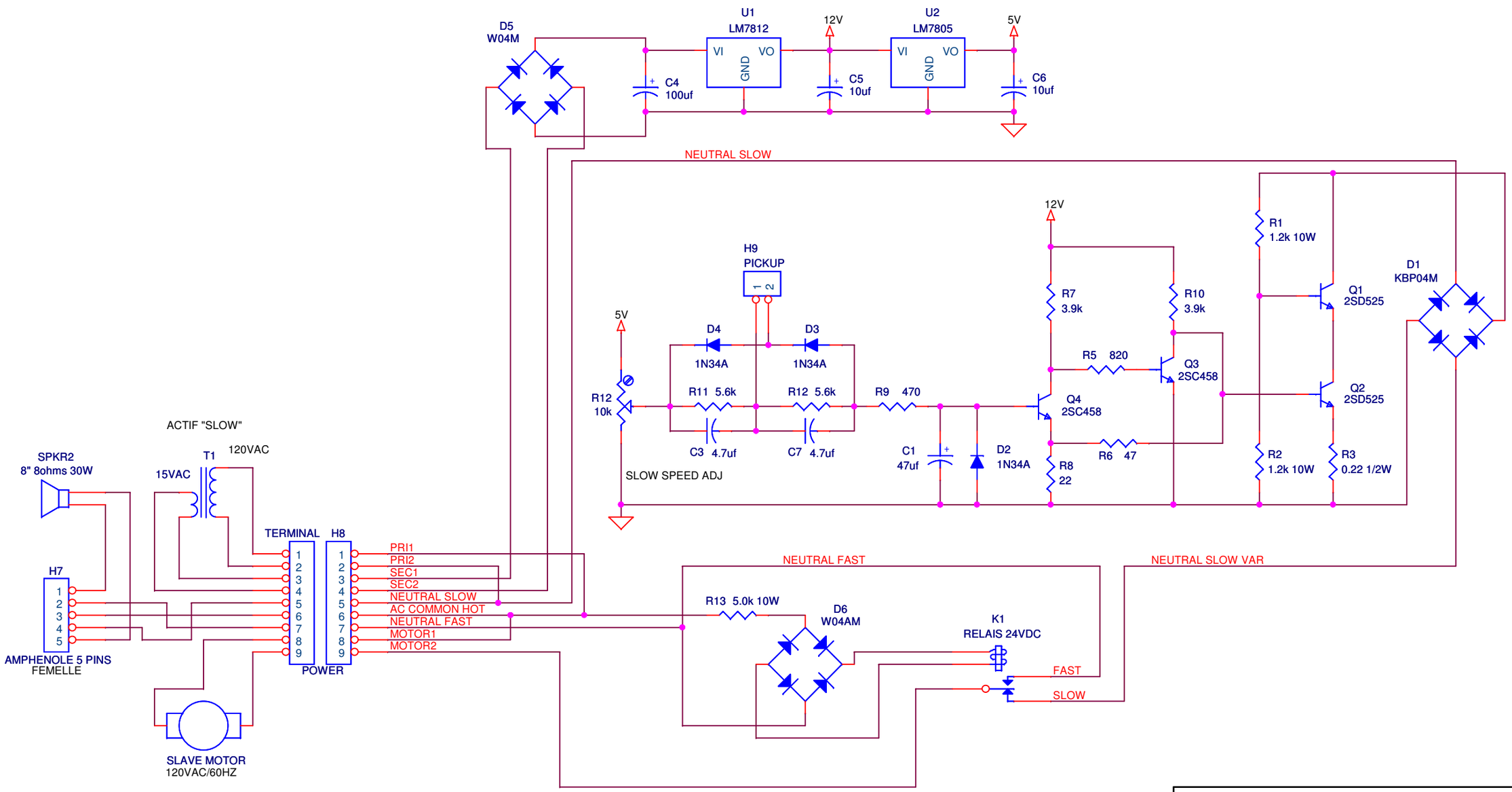


| | |
|---|---|
| Title | **LESLIE SLAVE UNIT** |
| Size | Document Number **Arcenson** Rev JPD |
| Date: Saturday, July 04, 2020 | Sheet 2 of 3 |